690V Outdoor Communication Cabinet for Data Center Users

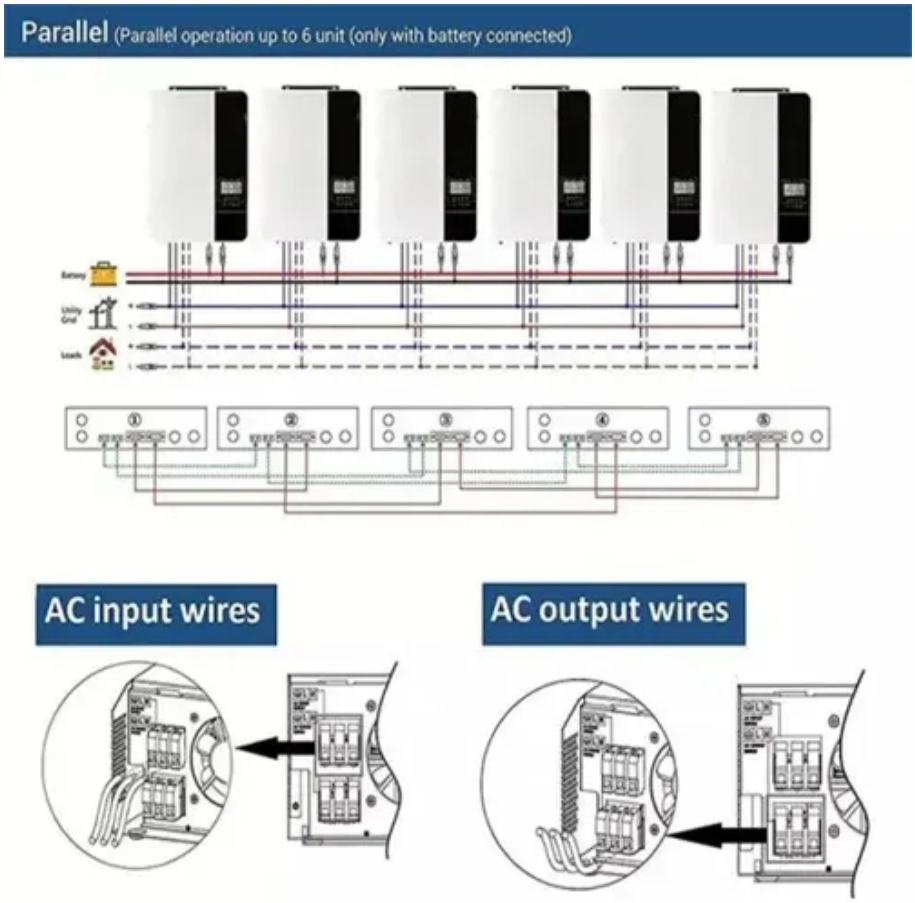

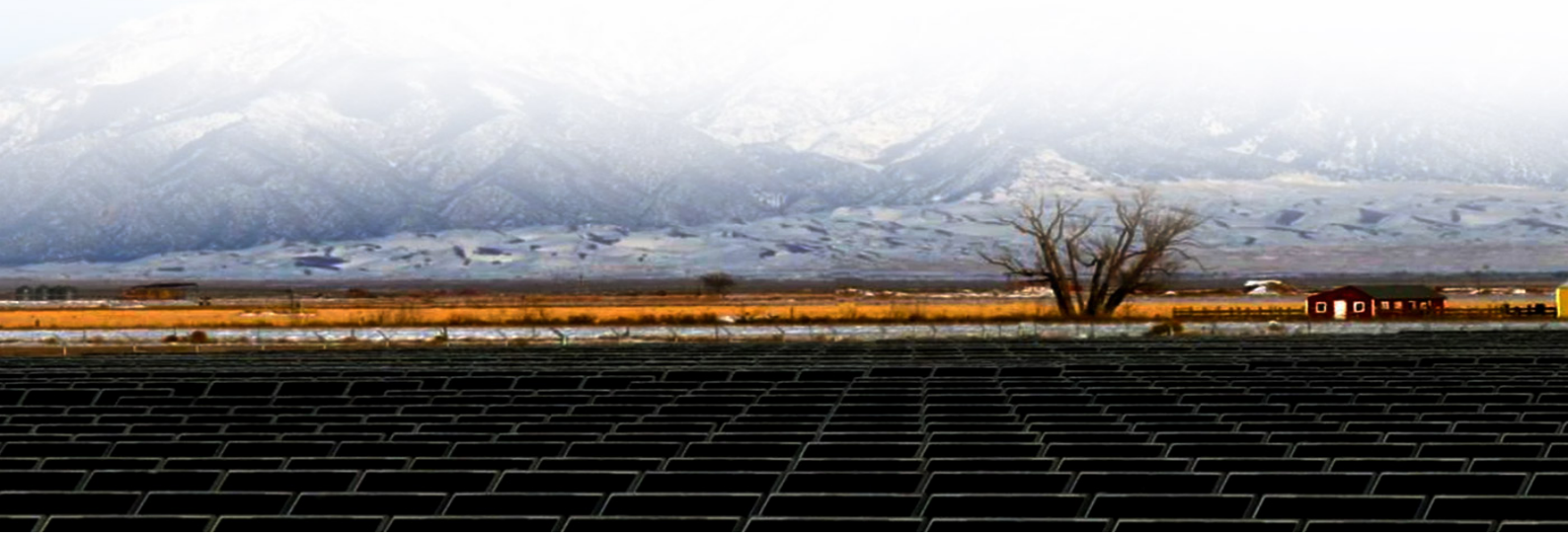

690V Outdoor Communication Cabinet for Data Center Users

Understanding Outdoor Communication Cabinets ...

Outdoor communication cabinets protect telecom equipment like routers and switches, ensuring durability, security, and optimal ...

Outdoor Telecom Cabinets & Enclosures , NEMA ...

Explore durable outdoor cabinets and enclosures engineered for protection, performance, and reliability in demanding environments.

Outdoor Telecommunication Enclosures

These specialized cabinets house and protect sensitive equipment like routers, switches, and other network devices. Efficient outdoor enclosures ensure reliable performance and longevity ...

NEMA Outdoor Telecommunications Cabinets , DDB Unlimited

DDB Unlimited manufactures NEMA outdoor cabinets to protect telecommunications, fiber optics, Wi-Fi and other electronics from the outdoors.

[Outdoor Communication Cabinets and Power Cabinets](#)

These design features ensure that outdoor communication cabinets can provide comprehensive protection for internal communication equipment in various complex and harsh environments, ...

[Outdoor Server Racks & Outdoor Data Cabinets , IP Rated](#)

Our outdoor wall mounted outdoor cabinets also feature a water and dust proof polyurethane door joint strip for added protection. Plus, our server racks add an extra layer of cable management ...

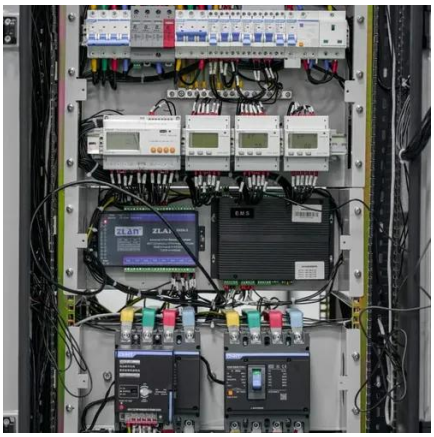

[Outdoor Communication Cabinets in the Real World: 5 Uses ...](#)

Outdoor communication cabinets are weather-resistant enclosures designed to house networking and telecommunications equipment outdoors.

[What Are Outdoor Communication Cabinets and ...](#)

Outdoor communication cabinets protect critical equipment from harsh weather, ensuring reliable performance for ...

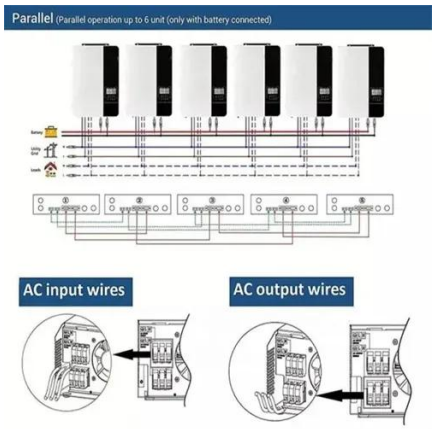

Voice & Data Communication Cabinets & Racks

Voice and data communication cabinets and racks hold equipment for providing service in voice and data communication networks. Also known as server racks and cabinets, they allow users ...

Why Outdoor Communication Cabinets Are Crucial ...

Outdoor communication cabinets protect telecom equipment from weather and security threats, ensuring reliable, efficient, and ...

Racks and Cabinets , nVent HOFFMAN

Racks and Cabinets nVent HOFFMAN provides high quality, configurable racks and cabinets designed for any Data Center and Networking application Wall-mounted cabinets provide ...

Server and Network Cabinets , Legrand

Legrand Server and Network Cabinets Legrand is a global provider of data center server and network cabinets, providing fully enclosed racks with side panels, front and rear doors, and ...

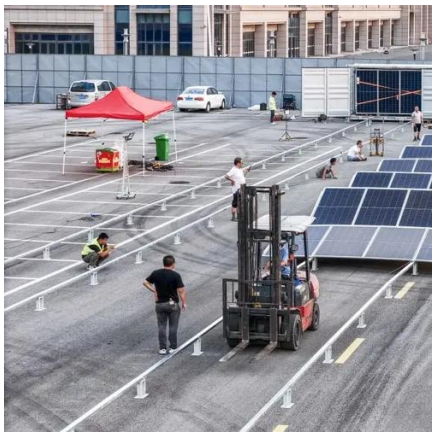

Find the Best Outdoor Communication Cabinets in 2025

Discover top suppliers of outdoor communication cabinets in 2025. Learn about durable, secure, and customizable options for reliable outdoor solutions.

Outdoor Telecom Enclosure

When it comes to reliability, our KDM outdoor telecommunication cabinets are second to none. Built from stainless steel, aluminum, or galvanized steel, you can trust in their performance, no ...

NEMA Outdoor Telecommunications Cabinets

DDB Unlimited manufactures NEMA outdoor cabinets to protect telecommunications, fiber optics, Wi-Fi and other electronics from the ...

Outdoor Data Centers, Outdoor Data Center, ...

Outdoor Data Centers- Now Build Your Own Data Center Anywhere- Deployable Within 10 weeks- These portable steel armored metal ...

Outdoor Enclosures , NEMA-Rated Telecom Cabinets , IP55, ...

Our outdoor telecom cabinets are designed to protect your sensitive network equipment from harsh environments where equipment may be exposed to dust or water. For added protection, ...

Outdoor Telecom Cabinet , Outdoor Telecom Enclosures , Cube Cabinet

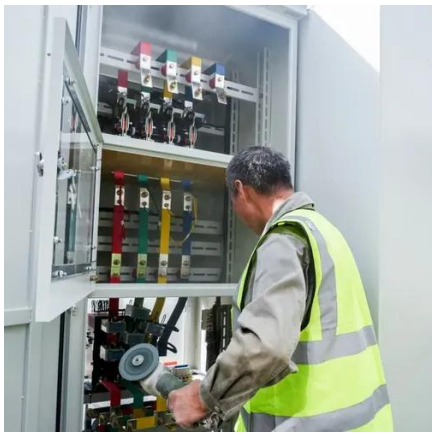

Outdoor Telecom Cabinet , Outdoor Telecom Enclosures , Cube ...

Designed to house a variety of communications equipment, CUBE customers take advantage of our engineering and factory integration for complete turn-key solutions. The CUBE product line ...

Outdoor Aluminum Communications Cabinet: Durable

Need a reliable outdoor aluminum communications cabinet? Ideal for telecom, data centers, and street installations. Waterproof, UV-resistant, and customizable. Click to explore top-rated ...

Designed to house a variety of communications equipment, CUBE customers take advantage of our engineering and factory integration for complete turn-key solutions. The CUBE product line ...

Outdoor Weatherproof Cabinets for Electronics

Protect your outdoor electronics with AZE Telecom's weatherproof cabinets and waterproof server racks. Explore durable, IP-rated enclosures for ...

Outdoor communication cabinet

HuiJue Group offers advanced outdoor cabinets and energy storage systems, specializing in outdoor base station cabinets, battery enclosures, and integrated energy solutions for global ...

NEMA-Rated Outdoor Telecom Cabinets Enclosures , AZE

These weatherproof indoor/outdoor telecom cabinets are modeled after proven designs, and they are customizable to meet your needs. We can build to your specifications or take your ...

What Are Outdoor Communication Cabinets and Their Key Features

Outdoor communication cabinets protect telecom equipment from weather and damage. Key features include durability, cooling, security, and scalability.

Contact Us

For inquiries, pricing, or partnerships:
https://zawojesolina.pl
Phone: +48 22 173 6647
Email: info@zawojesolina.pl

Scan QR code for WhatsApp.